Modified Truss Head, Phillips, Self-Drilling Screw

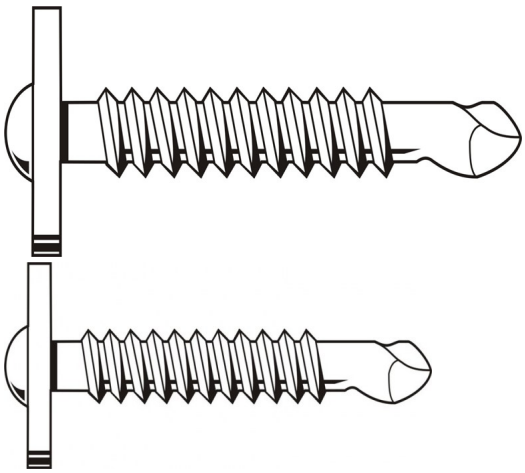

Rating: Not Rated Yet
Ask a question about this product

Description

SIZE	PHIL DRIVE SIZE	DRILL POINT	QTY / CTN	WT / CTN	ZINC PART #	BLACK PART#
8 x 1/2	#2	#3	10M	36	TIPMT0808Z	TIPMT0808P
8 x 9/16	#2	#3	10M	41	TIPMT0809Z	TIPMT0809P
8 x 3/4	#2	#3	10M	48	TIPMT0812Z	TIPMT0812P
8 x 1	#2	#3	8M	43	TIPMT0816Z	TIPMT0816P
8 x 1-1/4	#2	#3	7M	47	TIPMT0820Z	TIPMT0820P
8 x 1-5/8	#2	#3	5M	44	TIPMT0826Z	TIPMT0826P
8 x 1-3/4	#2	#3	3M		TIPMT0828Z	
8 x 1-7/8	#2	#3	3M	40	TIPMT0830Z	
8 x 2	#2	#3	3M	40	TIPMT0832Z	
8 x 3	#2	#3	2M	40	TIPMT0848Z	
10 x	#2	#3	8M	47	TIPM	

3/4					T1012Z	
10 x 3			1.75 M		TIPMT1048Z	